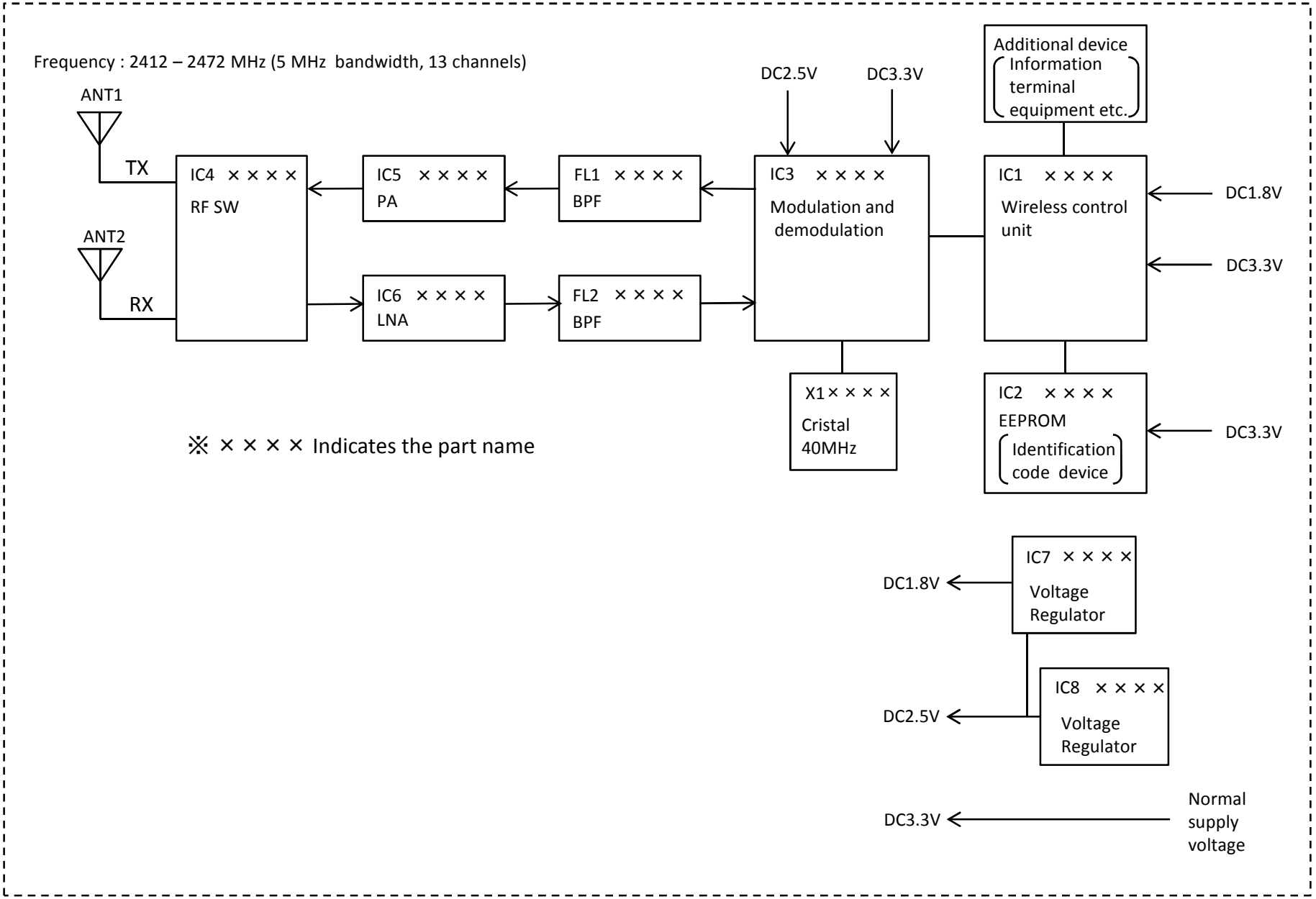
Frequency : 2412 – 2472 MHz (5 MHz bandwidth, 13 channels)
ANT1
TX
ANT2
RX
IC4 × × × ×
RF SW
IC5 × × × ×
PA
FL1 × × × ×
BPF
IC6 × × × ×
LNA
FL2 × × × ×
BPF
DC2.5V
DC3.3V
IC3 × × × ×
Modulation and demodulation
X1 × × × ×
Cristal 40MHz
Additional device
Information terminal equipment etc.
IC1 × × × ×
Wireless control unit
DC1.8V
DC3.3V
IC2 × × × ×
EEPROM
Identification code device
DC3.3V
※ × × × × Indicates the part name
IC7 × × × ×
Voltage Regulator
DC1.8V
IC8 × × × ×
Voltage Regulator
DC2.5V
DC3.3V
Normal supply voltage